MC-44 (MULTI FUNCTION MICROPHONE)

MC-44 SCHEMATIC DIAGRAM

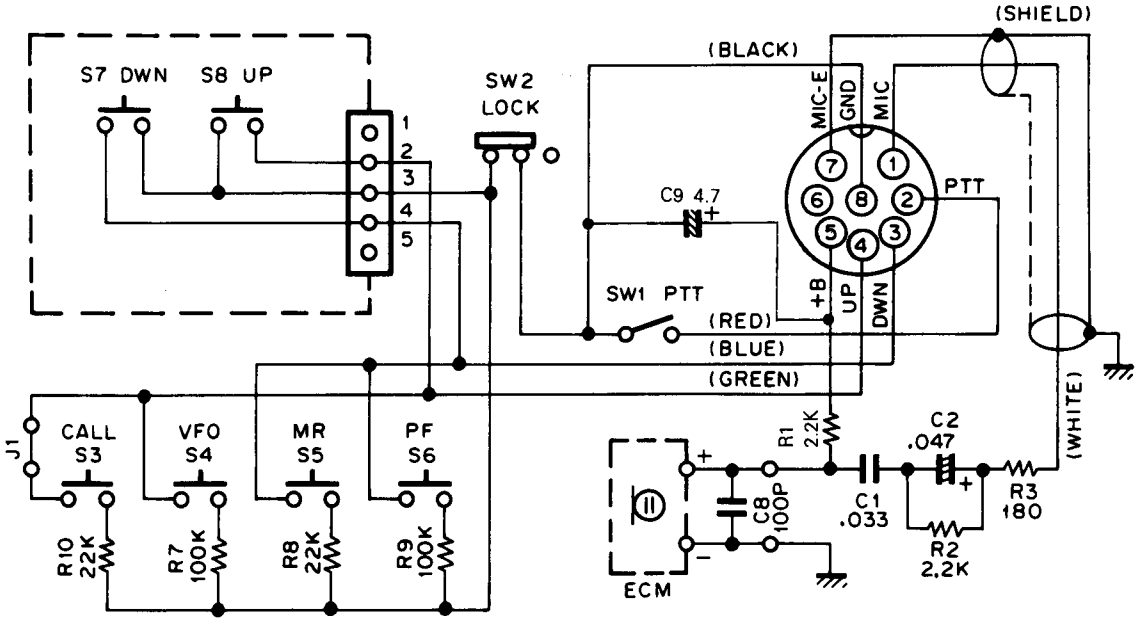

MC-44 PARTS LIST

Ref. No.	New parts	Parts No.	Description
		A02-0896-18	Case (Front)
		A02-0900-08	Case (Rear)
		B50-8293-18	Instruction manual
		E30-2149-08	Curl cord
		G13-0933-08	Cushion
		K29-3165-08	Knob PTT
		K29-3168-18	Knob UP
		K29-3169-18	Knob DOWN
		K29-3170-08	Knob CALL, VFO, MR, PF
SW2		S31-1422-08	Slide switch LOCK
SW1		S50-1431-08	Micro switch PTT
S7, 8		S59-1409-28	Switch UP, DOWN
		T91-0383-08	Microphone element (Condenser microphone)